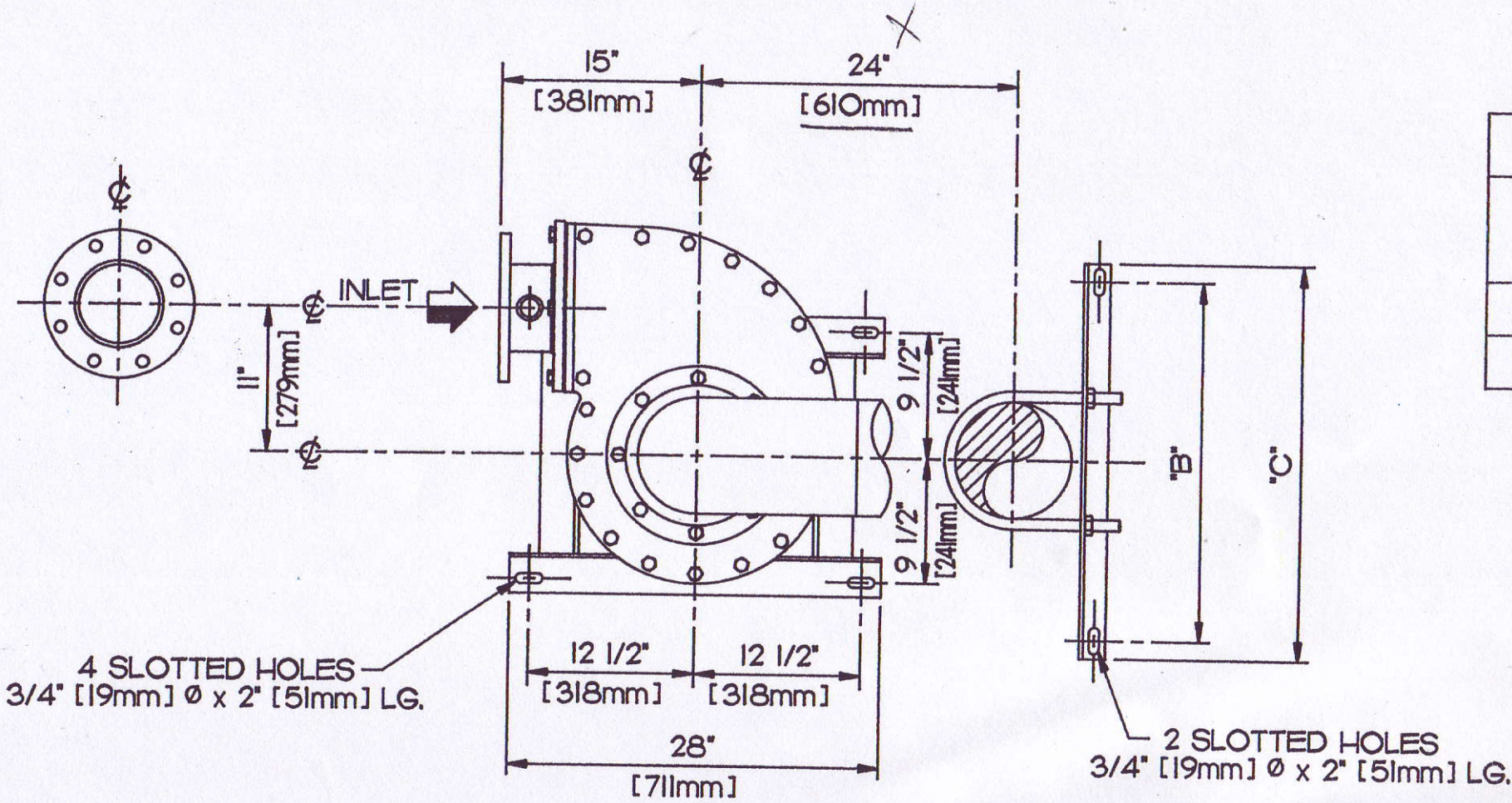
15"
[381mm]
24"
[610mm]
INLET
11"
[279mm]
9 1/2"
[241mm]
9 1/2"
[241mm]
"B"
"C"
12 1/2"
[318mm]
12 1/2"
[318mm]
28"
[711mm]
4 SLOTTED HOLES
3/4" [19mm] Ø x 2" [51mm] LG.
2 SLOTTED HOLES
3/4" [19mm] Ø x 2" [51mm] LG.

PLAN